1.0 SCOPE

When shaft manufacturing is outsourced, this guide is to be used by the vendors for the machining of shafts per Norwood Standards. If shafts are manufactured in house, labor packet and routing are to be used.

The instructions within this procedure are to be followed whether it is called for on Siemens drawing or not. For discrepancies between this procedure and the shaft drawing, contact Siemens Norwood before manufacture of the shaft.

2.0 BACKGROUND

With the variety of shafts outsourced by Siemens, there are several types of shafts with special manufacturing conditions. This document will clarify all details so that any vendor may manufacture any shaft to any specification.

3.0 FOR ALL SHAFTS

a. Drill and tap drive end of shaft only for all other shafts unless called out on drawing.
b. If no center drill/tap is specified on non drive end, center drill to provide machine center the same as drive end but do not drill/tap. If shaft is copper cage, vertical, and sleeve bearing motors (notes 9 and 12) drill and tap both ends per DE.
c. For all shafts, the surface finish for all radii must be 32RA max. Radii shall be free of any tool marks.
d. Stamp part number on non drive end of shaft using .25 in. lettering
e. Unless otherwise specified, the radius on the bottom of all keyways over .250" in width shall be .030".
f. Place undercut of 0.020" at corner between rotor core fit and core stop.
g. Mark by paint all shaft/shaft logs on the diameter face with a Unique Supplier Serial Number (USSN) as agreed with Siemens Purchasing group. All the shaft documents (key characteristic sheets, material certs, VSR certs, oven chart, etc.) to be marked with the same USSN.

4.0 IDENTIFYING MOTOR SHAFTS

a. Horizontal motor with sleeve bearings: (see Figure 1)
b. Horizontal motor with Anti-Friction bearings: (see Figure 2)
c. Vertical motor shaft: (see Figure 3)

Other features will be present on the shaft. Figures are generalized for identification purposes.

5.0 TITLE BLOCK

Tittle block may be used to identify certain features

Typical title block is shown. Exact format/information may differ. (see Figures 5 & 6)

6.0 IDENTIFYING SHAFTS THAT REQUIRE GRIND STOCK

SHAFTS THAT MEET THE CONDITIONS BELOW REQUIRE THAT GRINDSTOCK IS LEFT ON APPROPRIATE FITS (SEE SECTION 7.0)

a. All vertical shafts (see Fig. 3 & 5 or 6)
b. Shafts with vibration probe fits (see Fig. 1 notes)
(AS) c. All 2-Pole shafts (see section 5 Title Block. Number of poles noted in title block) Note: Except 1RP1 and 1SP1 (see Figure 6 "Motor Designation")
d. All 708, 788, 880 frame size shafts (see Fig. 5) and SH400, SH450, SH500, SH560 frame size shafts (see Fig. 6).
~~e. All shafts to have grind stock~~
f. All aluminum die cast shafts to have grind stock. Identified by ADC, D/C, or Die Cast in Figures 5 or 6 or lack of core stop in Figures 1 and 2 as well as Note 12.

7.0 MACHINING GUIDELINES

WHEN GRINDSTOCK IS REQUIRED PER SECTION 6.0 THE FOLLOWING PROCEDURES MUST BE FOLLOWED

~~a. Stamp part number on both ends of shaft~~

b. Vendor should leave 0.020 (+- .002) grind stock with surface finish of 125 max diameter on the fits identified below

1. Always on bearing fits and shaft extension, except for tapered shaft extensions.
2. All fits identified with 32 finish or better
3. Fits marked as Burnish & Demagnetize
4. For vertical shafts only, every fit from inside end cap fit to end of shaft, except shaft extensions that are tapered. (Both ends) see note 11

~~5. Any tapered fit~~

6. Inside and outside oil seal fits

c. All other fits can be machined to size. Shaft extensions that are tapered must be checked with taper gauge to varify machining.
d. For the fits where grind stock is left, machine shoulders to size and undercut the radius by 0.020 below finished dimension
e. Shafts requiring M36 tapped hole must be machined per Form DR M36 with a maximum chamfer diameter of 44-45mm (see Figure 7)
f. All 2 pole shafts require grind operation of core fit for correct tolerance and finish
g. All 4 pole and slower shafts do not require grind operation of core fit. Machine core fit to +0.002" of listed core fit diameter. Runout with respect to the core fit to be 0.006" for both bearing fit and shaft extension. Runout with respect to the drive end bearing fit to be 0.0005" for the non-drive end bearing fit and shaft extension.

8.0 WELDED SHAFTS WITH SPIDER BARS (See note 4 and Figure 4)

BEFORE WELDING SPIDER BAR SHAFT, MACHINE SHAFT PER INSTRUCTIONS BELOW:

a. Leave .120" on each end of shaft
b. Leave .125" on each shoulder
c. Leave .240"+/- .01 on each diameter
d. Turn fit under spider bars to size
e. Do not turn snap ring groove or o-ring grooves
f. Do not cut threads (If specified)
g. Do not machine keyways
h. Drive pin marks <.060" deep allowed
i. Mill flats when specified. Machine 6 flats 1/4 longer (per side) than the referenced (spider) bar length.
j. Cut .062" rad. groove, .015" deep on non drive end to mark where the spider bars will be located. Locate groove in center of dimension.
k. Do not center drill and tap both ends of shaft as specified on rotor shaft drawing. Center drill both ends with standard 60° center drill to a d3 dimension of 5/8 . Drawing 53-653-768 defines d3"
l. If full penetration welds require Ultrasonic Testing, test the welds before making final weld pass.

~~9.0 FOR SHAFTS REQUIRING NORMALIZATION~~

~~a. Shafts to be normalized are identified by this note: "Normalize per 51-008-879-401~~
~~b. Normalize shaft as a round bar per normalizing drawing before welding spider bars unless special pre machining instructions are given at time of purchase~~
~~c. After normalizing, quench and temper to meet the specifications called out on the material drawing~~

10.0 SHAFTS REQUIRING THERMAL STRESS RELIEVING (TSR)

a. Shafts to be thermally stress relieved are identified by these notes Treat per 55-112-198-403" or "Treat per 55-112-198-401".
b. Shafts are to be thermal stress relieved after welding and before final machining

11.0 SHAFTS REQUIRING VIBRATORY STRESS RELIEF (VSR)

Shafts to be vibratory stress relieved are identified by these notes "VSR PER 51-008-415-000", "VSR PER 51-008-415-002" or VSR PER 55-112-198-402"

If vendor is to perform VSR:

a. For spider bar shafts, VSR after welding. After VSR follow grindstock machining per section 6.0.
b. For solid shafts, VSR round bar prior to machining. After VSR follow grindstock machining required per section 6.0.

FIGURE 6
Typical Updated Title Block
Format may differ

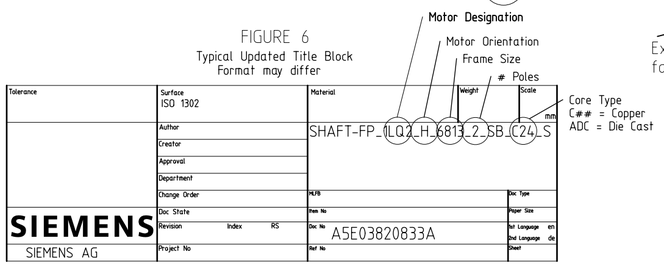

FIGURE 5
Typical Legacy Block
Format may differ

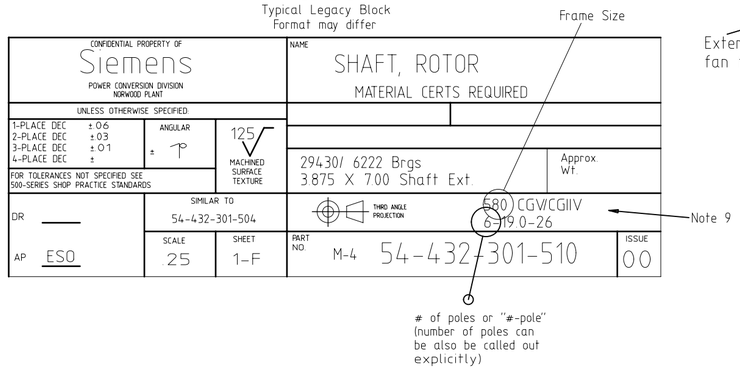

Figure 7
Form DR M36

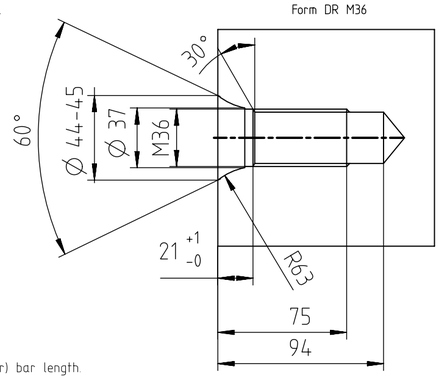

FIGURE 1
Typical horizontal motor w/ sleeve bearing

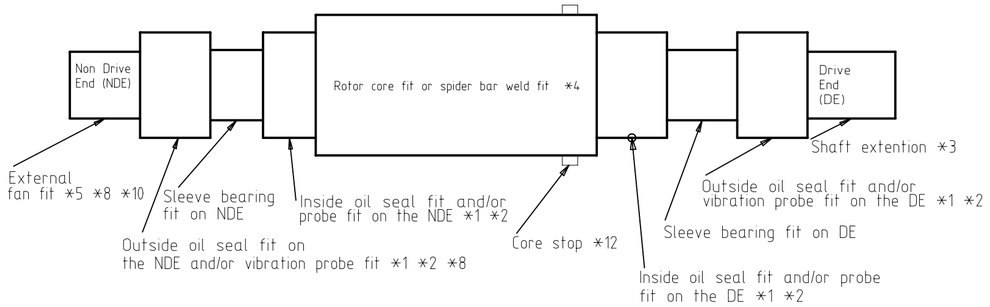

FIGURE 2
Typical horizontal motor w/ anti-friction bearing

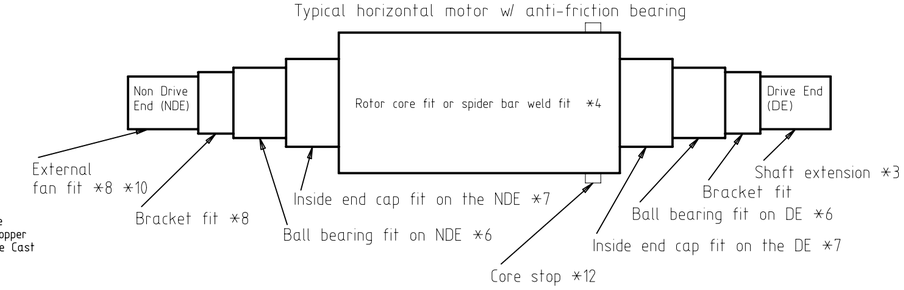

FIGURE 3
Typical vertical motor

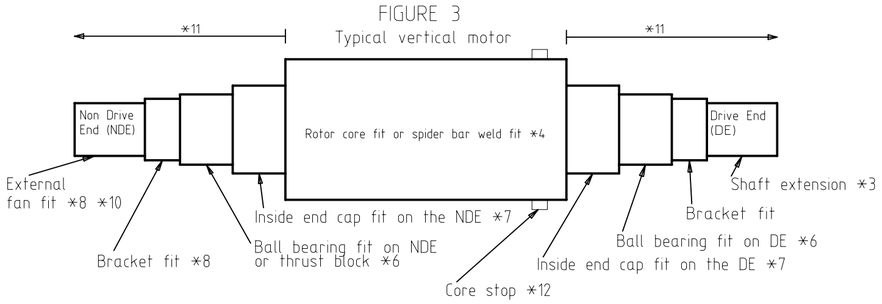

Figure 4
Typical section view of Spider Bar Shaft

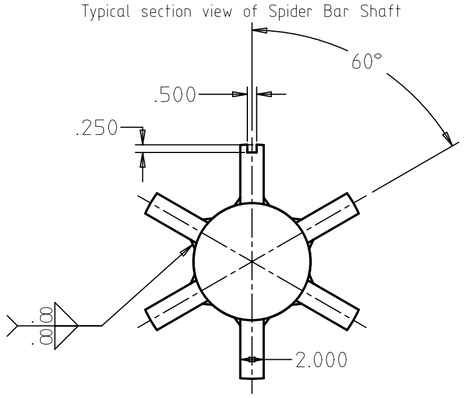

(AS) SECTION 6.c: ADDED "EXCEPT FOR 1RP1 and 1SP1 (see Figure 6 "Motor Designation")"
ADDED LABEL TO FIGURE 6
EFF. IMM. ESO

Notes:

*01 - The vibration probe fit can be on the inside or outside oil seal
*02 - Vibration probe fit is identified by following note on shaft drawing - "Burnish and Demagnetize"
*03 - Shaft extension is also known as Pulley Fit and will have a keyway in most cases
*04 - Rotor core fit can also be spider bar weld fit. Please refer to actual shaft drawing. Shafts with spider bars can be identified by sectional view shown in Figure 4
*05 - Shaft may or may not extend beyond NDE sleeve bearing fit
*06 - The ball bearing fit can be identified as a dimention having a four decimal place tolerance
*07 - Ball bearing shafts do not have probe fits
*08 - Shaft may or may not extend beyond NDE ball/sleeve bearing fit.
*09 - Vertical shafts can be identified by a note "Vertical," "V" for example CAZ"V" in the title block
*10 - External fan fit can be identified by a section w/ a keyway, and threads at the end of the shaft
*11 - All fits from inside end cap fit to end of shaft
*12 - Core stop identifies copper cage and vertical rotors

For any further questions, refer to the shop practice manual

Tolerance	Surface	Material	Weight 0 / Scale inch
	Author	SHAFT PROCESSING INSTRUCTIONS	
	Creator 2026-03-24 Potts		
	Approval		
	Department		
	Change Order P1A00038482	Product MLFB/Product-ID	Doc Type TB / Z
INNOMOTICS	Doc State	Item No	Paper Size C
	Revision (Counter) 017 / Revision State AS	Doc No 52332001401	1st Language en / 2nd Language de
©Innomotics 2026	Project No	Ref No	Sheet 1 of 1

Weitergabe sowie Vervielfältigung, Verbreitung und/oder Bearbeitung dieses Dokumentes, Verwertung und Mitteilung seines Inhaltes sind verboten, soweit nicht ausdrücklich zugestanden. Zuwiderhandlungen verpflichten zu Schadenersatz. Alle Rechte für den Fall der Patenterteilung, Gebrauchsmuster- oder Geschmacksmustereintragung vorbehalten.

Transmittal, reproduction, dissemination and/or editing of this document as well as utilization of its contents and communication thereof to others without express authorization are prohibited. Offenders will be held liable for payment of damages. All rights created by patent grant or registration of a utility model or design patent are reserved.

Делегируется в качестве производственного сюрета. Все права сохранены в случае регистрации патента, полезной модели или промышленного образца.

Confié à titre de secret d'entreprise. Tous droits réservés. Communication, usage et extrait interdits. Réservé aux droits de brevets.